Intel® Xeon® Processor 3400 Series Platform Memory Configuration

October 2009

Intel® Xeon® Processor 3400 Series Platform Memory Overview

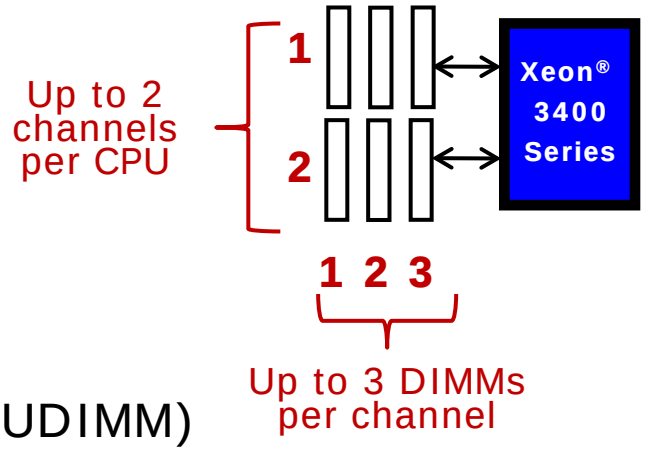

- Platform capability (6 DIMMs)
  - Up to 2 channels
  - Up to 3 DIMMS per channel*
- Memory types supported:
  - DDR3 1333, 1066, and 800
  - Registered (RDIMM) and ECC unbuffered (UDIMM)
  - Single-rank (SR), dual-rank (DR), quad-rank (QR)
- System memory speed is set by BIOS depending on:
  - DIMM type(s) used (memory speed, U/RDIMM, SR/DR/QR)
  - DIMMs populated per channel
- Both channels in a system will run at the fastest *common* frequency
  - Example: If you populate 2 DIMMs at 1333 MHz in Channel 1, and 1 DIMM at 1066 MHz, all the DIMMs will run at 1066 MHz

* Actual number of DIMM slots per channel determined by server board manufacturer

© 2009 Intel Corporation. All rights reserved.
*Other names and brands may be claimed as property of others.

Choosing Registered or Unbuffered

Priority	Choose
High Capacity • 3 DIMMs per channel • 4 or 8GB DIMMs	Registered
Ultimate RAS	
Mainstream Capacity • 1 or 2 DIMMs per channel • 1 or 2GB DIMMs	Unbuffered ECC
Excellent RAS	
Lower Cost	

If you are populating more than 12GB memory, RDIMM solutions are cheaper

© 2009 Intel Corporation. All rights reserved.
*Other names and brands may be claimed as property of others.

Intel® Xeon® Processor 3400 Series Platform RDIMM Support

DIMM Slots per Channel	DIMMs Populated per Channel	DIMM Type	POR Speeds	Ranks per DIMM (any combination)	Supported Board Layer
3	1	Registered DDR3 ECC	1066, 1333	SR, DR	6
3	1	Registered DDR3 ECC	1066	QR	6
3	2	Registered DDR3 ECC	1066, 1333	SR, DR	6
3	2	Registered DDR3 ECC	800**	QR	6
3	3	Registered DDR3 ECC	800**	SR, DR	6

Other Notes & Restrictions:

- Memory suppliers not productizing native 800 RDIMMs
- No support for LV DIMMs
- Lynnfield will support all timings defined by JEDEC
- 256Mb/512Mb technology, x4 and x16 DRAMs on RDIMM are NOT supported on Foxhollow platform
- All channels in a system will run at the fastest common frequency
- No mixing of registered and unbuffered DIMMs

Max Memory Possible (x8 devices)	1Gb DRAM Technology	2Gb DRAM Technology
Single Rank RDIMMs	6GB (6x 1GB DIMMs)	12GB (6x 2GB DIMMs)
Dual Rank RDIMMs	12GB (6x 2GB DIMMs)	24GB (6x 4GB DIMMs)
Quad Rank RDIMMs	16GB (4x 4GB DIMMs)	32GB (4x 8GB DIMMs)

Notes:

- *RDIMM support on Lynnfield only*
- *1066 RDIMMs running at 800; BIOS should automatically down shift higher speed DIMMs to 800*

© 2009 Intel Corporation. All rights reserved.
*Other names and brands may be claimed as property of others.

Summary: Key Messages for DDR3

- Supports ECC Memory
  - Systems with 4G non-ECC memory will have 14 to 28 unplanned downtime occurrences each year[1,2]
  - ECC corrects up to 99.988% of all memory errors
  - ECC helps ensure 24x7 data availability
- Server Class Memory Capacity
  - Up to 32GB/Memory using RDIMMs
- 6 DIMM slots
  - Use of RDIMMs Gives Customers Flexibility for Future Memory Upgrades

Learn more at www.intel.com/go/boxedxeon

[1] X. Li, K. Shen, M. Huang, and L. Chu. A memory soft error measurement on production systems. In *USENIX Annual ggfTechnical Conf., 2007*.[2] Xin Li, Michael C. Huang, Kai Shen, Lingkun Chu. An Empirical Study of Memory Hardware Errors in A Server Farm. Proceedings of the 3rd workshop on on Hot Topics in System Dependability, 2007

© 2009 Intel Corporation. All rights reserved.
*Other names and brands may be claimed as property of others.

Backup

© 2009 Intel Corporation. All rights reserved.
*Other names and brands may be claimed as property of others.

ECC Memory Overview

- **What is ECC?**
  - ECC is technology that allows computers to detect and correct memory errors
- **Probability of Memory Error**
  - Generally, chances for memory error occurring are about 3 to 11 errors per 1GB of memory per month of uninterrupted operation for modern memory devices (500 to 2000 FIT per Mbit) [1]
- **What Causes Memory Errors?**
  - Hard errors are caused by fabrication defects in the memory chip and are much more common than soft errors
  - Soft errors are caused predominantly by electrical disturbances such as an alpha particle or cosmic radiation that cause a transistor to change its states
- **How ECC Works**
  - For each byte of data sent across the memory bus, a check-bit is generated by calculating that byte of data using an Exclusive OR algorithm.
  - This check-bit is stored in a separate memory chip. The system will use the check-bit to check if the data is correct, and correct the single-bit error if there is one.
  - ECC support requires a motherboard that supports ECC memory modules in addition to the ECC memory modules themselves.

[1] Tezzaron Semiconductor. Soft errors in electronic memory. *White paper*, 2004. http://www.tezzaron.com/about/papers/papers.html

© 2009 Intel Corporation. All rights reserved.
*Other names and brands may be claimed as property of others.

Why ECC Matters to Servers

- **Memory errors can cause system crashes or bad data**
- **An unnoticed memory error is not tolerable in a business server**
- **ECC can detect multiple-bit memory errors and locate and correct single-bit errors to keep business applications running smoothly**
  - Based on an empirical study, for servers with 4GB of DDR2 ECC memory running 24x7, the average chance of memory error happening is about 13 times every month. **ECC corrects 99.988% of errors**.[1,2]

Real Servers with ECC Memory Protect Your Business Investment

[1] X. Li, K. Shen, M. Huang, and L. Chu. A memory soft error measurement on production systems. In *USENIX Annual ggfTechnical Conf., 2007*.[2] Xin Li, Michael C. Huang, Kai Shen, Lingkun Chu. An Empirical Study of Memory Hardware Errors in A Server Farm. Proceedings of the 3rd workshop on Hot Topics in System Dependability.2007

© 2009 Intel Corporation. All rights reserved.
*Other names and brands may be claimed as property of others.

Business Impact of Memory Errors

- Systems with 4G non-ECC memory will have 140 to 560 memory errors per year (500 to 2000 FIT per Mbit) [1,2,5]
- Memory errors cause unplanned downtime which costs money
  - Supposing that 10% of errors cause a system crash,[3] the system will crash 14 to 56 times a year
  - If each crash interrupts business for 10 minutes, the cost is **$4,300 to $50,000** for Windows-based server applications[4]
- Memory errors cause unpredictable business problems
  - Supposing that 10% of errors cause erroneous data, **14 to 56 erroneous data** will be created in your database each year
  - Potential issues with accounting, inventory, order or price systems for retailers, wholesalers, stock brokers, pharmacies, clinics, etc.
- Systems with 4G ECC memory will have 1 uncorrectable memory error every 53 years [1,2]
  - For server lifetime of 3 to 5 years, chance for uncorrectable memory errors is **less than 0.1 time in lifetime of server**

Why Take the Risk?
Choose a Real Server with ECC Memory

[1] X. Li, K. Shen, M. Huang, and L. Chu. A memory soft error measurement on production systems. In *USENIX Annual ggfTechnical Conf., 2007.* [2] Xin Li, Michael C. Huang, Kai Shen, Lingkun Chu. An Empirical Study of Memory Hardware Errors in A Server Farm. Proceedings of the 3rd workshop on Hot Topics in System Dependability.2007 [3] Alan Messer, Philippe Bernadat, Guangrui Fu, "Susceptibility of Commodity Systems and Software to Memory Soft Errors," IEEE TRANSACTIONS ON COMPUTERS, VOL. 53, NO. 12, DECEMBER 2004. [4] 2005 North American Linux and Windows TCO Comparison Report, Part 1 [5] Tezzaron Semiconductor. Soft errors in electronic memory. White paper, 2004

© 2009 Intel Corporation. All rights reserved.
*Other names and brands may be claimed as property of others.